CEE 3424 – Design of Reinforced Concrete Structures I
Fall 2008
Homework #6 – Due Date: Monday, October 20, 2008

Design each of the following:

1. Select the reinforcing steel for a rectangular beam with the following parameters:

b = 12 in.	w_L = 1 kip/foot
h = 20 in.	w_{sw} = ?
f'_c = 5500 psi	P_D @ mid-span = 4 kips
f_y = 60 ksi	1 ½ in. clear cover
L = 22 feet	#4 stirrups
	1 in. clear spacing between layers

   - Show checks for A_{smin}, a/d_t (or ε_t)
   - Determine the size, layout, and spacing of longitudinal bars (assume #4 stirrups)
   - Draw and label the cross section (computer generated preferred)

2. Select b, d, h and reinforcing steel for a rectangular beam with the following parameters:

   f'_c = 3000 psi
   f_y = 60 ksi
   L = 32 feet
   w_D = 0.5 kips/ft
   w_{sw} = ?
   P_L = 10 kips @ quarter points (i.e. every 8 feet)

   - Show checks for A_{smin}, a/d_t (or ε_t)
   - Determine the size, layout, and spacing of longitudinal bars (assume #4 stirrups)
   - Draw and label the cross section (computer generated preferred)

Fall 2011

1) $b = 12"$
$h = 20"$
$f'_c = 5500$ psi
$f_y = 60$ ksi
$L = 22'$

$w_L = 1^{k}/_{1}$
$w_{SW} = 0.25^{k}/_{1}$
P_D @ MID-SPAN $= 4^{k}$
$1\frac{1}{2}"$ CLEAR COVER
#4 STIRRUPS
1"

STEP 1 (ESTIMATE M_u)

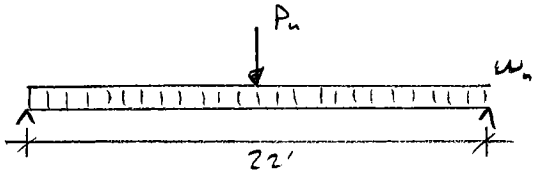

$$M_D = \frac{(0.25)(22)^2}{8} + \frac{(4)(22)}{4} = 37.13^{k'}$$

$$M_L = \frac{(1)(22)^2}{8} = 60.5^{k'}$$

$$M_u = 1.2M_D + 1.6M_L = (1.2)(37.13) + (1.6)(60.5) = \underline{141.36^{k'}}$$

STEP 2 ($\phi M_n \geq M_u$)

$$M_n \geq \frac{M_u}{\phi} = \frac{141.36}{0.9} = \underline{157.1^{k'}}$$

STEP 3 (GUESS AT d)

$d = h - 3 = \underline{17"}$

STEP 4 (COMPUTE REQUIRED A_s)

a) METHOD 1

$$A_s = \frac{M_n}{0.875 d f_y} = \frac{(157.1)(12)}{(0.875)(17)(60)} = 2.1^{in^2}$$

b) METHOD 2

$$\left(\frac{0.85 f'_c b}{2}\right) a^2 - (0.85 f'_c b d) a + M_n = 0$$

$$\left[\frac{(0.85)(5.5)(12)}{2}\right] a^2 - \left[(0.85)(5.5)(12)(17)\right] a + (157.1)(12) = 0$$

Fall 2011

STEP 4 (CONT'D)

$$28.05a^2 - 953.7a + 1885.2 = 0$$

$$a = \underline{2.15"}$$

$$A_s = \frac{0.85 f'_c a b}{f_y} = \frac{(0.85)(5.5)(2.15)(12)}{60} = \underline{2.01^{o"}}$$

STEP 5 (SELECT BARS)

3 #7's $A_s = 1.8^{o"}$
4 #7's $A_s = 2.4^{o"}$
3 #8's $A_s = 2.37^{o"}$
2 #9's $A_s = 2.00^{o"}$

STEP 6 (CHECK ε_t)

$$c = \frac{2.15}{0.775} = 2.77"$$

$$\varepsilon_t = 0.003\left(\frac{17 - 2.77}{2.77}\right) = 0.0154 >> 0.005 \quad \checkmark \text{O.K.} \quad \phi = 0.9$$

STEP 7 (CHECK $A_{s\,min}$)

$$A_{s\,min} = \frac{3\sqrt{f'_c}}{f_y} b_w d = \frac{3\sqrt{5500}}{60000}(12)(17) = \underline{0.756^{o"}} \leftarrow \text{CONTROLS}$$

$$A_{s\,min} = \frac{200}{f_y} b_w d = \frac{200}{60000}(12)(17) = \underline{0.68^{o"}}$$

STEP 8 (COMPUTE ACTUAL M_n & CHECK $\phi M_n \geq M_u$)

TRY 4 #7's $A_s = 2.4^{o"}$

$$d = 20 - 1.5 - 0.5 - \frac{0.875}{2} = 17.56"$$

$$a = \frac{A_s f_y}{0.85 f'_c b} = \frac{(2.4)(60)}{(0.85)(5.5)(12)} = \underline{2.57} \qquad c = \frac{2.57}{0.775} = \underline{3.55"}$$

$$M_n = (2.4)(60)(17.56 - \tfrac{2.57}{2})(1/12) = 195.3^{k'}$$

$$\varepsilon_t = 0.003\left(\frac{17.56 - 3.55}{3.55}\right) = 0.012 > 0.005 \quad \checkmark \text{O.K.} \quad \phi = 0.9$$

$$\phi M_n = 175.8^{k'} > 141.4^{k'} \quad \checkmark \underline{\text{O.K.}}$$

Fall 2011

STEP 9 (ITERATE IF NECESSARY)

NO ITERATION REQUIRED

STEP 10 (CHECK SPACING AND COVER AND SKETCH)

$x_{PROV} = 12 - 2\left(1.5 + 0.5 + \frac{4(0.5)}{2}\right) = 6''$

CLEAR SPACING = d_b OR 1" $d_b = 0.875$ 1" CONTROLS

C-C SPACING = 0.875 + 1 = 1.875"

$x_{REQ'D} = (3)(1.875) = 5.625'' < 6''$ ✓ O.K.

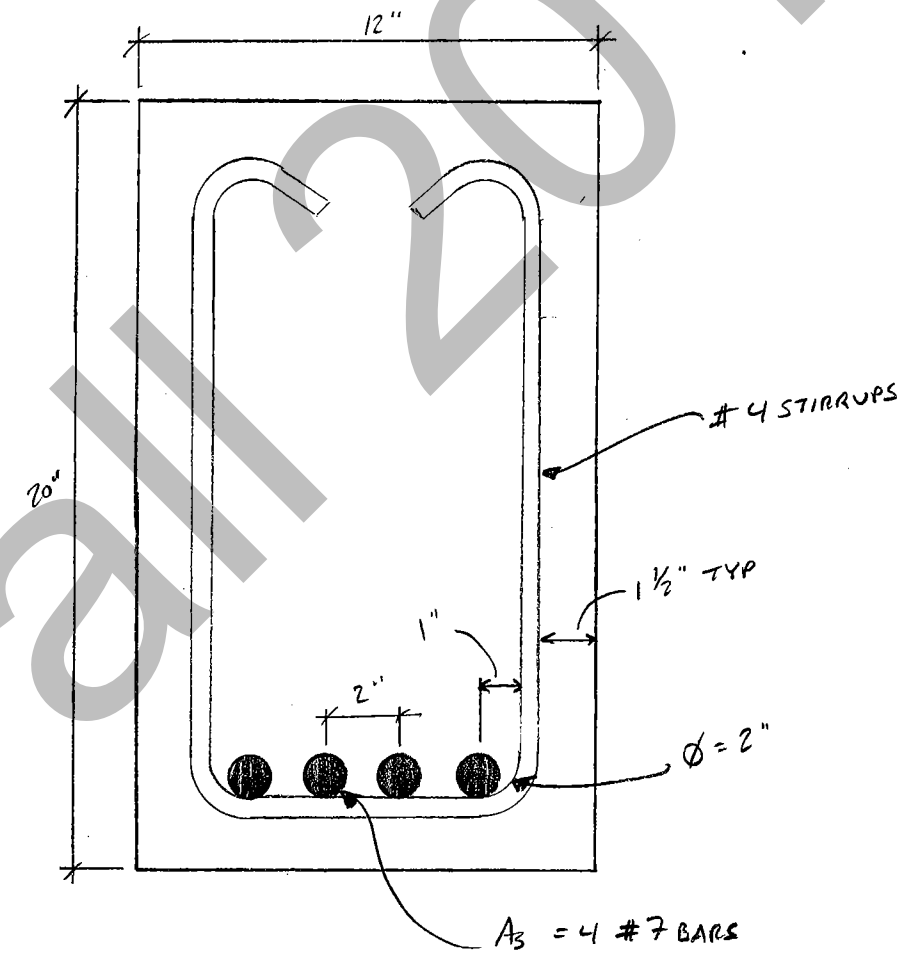

Fall 2011

2) $b = ?$
$h = ?$
$f'_c = 3000$ psi
$f_y = 60$ ksi
$L = 32'$

$w_D = 0.5$ k/'
$w_{SW} = ?$
$P_L = 10^k$ @ QUARTER POINTS
$1\frac{1}{2}$" CLEAR COVER
1" CLEAR SPACING BETWEEN LAYERS

STEP 1 (ESTIMATE SELF WEIGHT)

$$h = \frac{\ell}{10} = \frac{(32)(12)}{10} = 38.4"$$

$$b = \frac{h}{2} = \frac{38.4}{2} = 19.2"$$

$$w_{SW} = \frac{(38.4)(19.2)}{144}(0.15) = \underline{0.768\ k/'}$$

STEP 2 (ESTIMATE M_n)

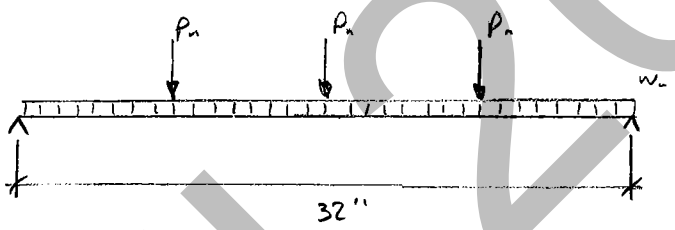

$$w_n = (1.2)(0.5 + 0.768) = \underline{1.52\ k/'}$$

$$P_n = (1.6)(10) = \underline{16^k}$$

$$R = \frac{(3)(16)}{2} + \frac{(1.52)(32)}{2} = \underline{48.32^k}$$

$$M_n = (48.32)(16) - (16)(8) - \frac{(1.52)(16)^2}{2} = \underline{450.56\ k'}$$

STEP 3 ($\phi M_n \geq M_u$)

$$M_n \geq \frac{M_u}{\phi} = \frac{450.56}{0.9} = \underline{500.6\ k'}$$

STEP 4 (SELECT A REINFORCEMENT RATIO)

$$\rho = \frac{A_s}{bd} \approx 0.012$$

Fall 2011

STEP 5 (MAKE MORE PRECISE DETERMINATION OF b & d)

$$bd^2 = \frac{M_n}{f'_c\,\omega(1-0.59\omega)} = \frac{(500.6)(12)}{(3)(0.74)(1-0.59\cdot 0.24)} = \underline{9719.63\ in^3}$$

$$\omega = \frac{\rho f_y}{f'_c} = \frac{(0.012)(60)}{3} = 0.24$$

CHOOSE b SOLVE FOR d

b	d
12	28.46
14	26.35
16	24.65 ← TRY THIS ONE
18	23.24

$$d = \sqrt{\frac{9719.63}{b}}$$

CHOOSE $b = 16''$ $d = 25''$ $h = 25 + 3 = 28''$

STEP 6 (CALCULATE ACTUAL M_n)

$$w_{sw} = \frac{(16)(28)}{144}(0.15) = \underline{0.47\ k/l}$$

$$w_u = 1.2(0.5 + 0.47) = \underline{1.16\ k/l}$$

$P_u = 16^k$

$$R = (47.56)(16) - (16)(8) - \frac{(1.16)(16)^2}{2} = \underline{404.5^{k'}} \qquad M_n = 449.44$$

STEP 7 (COMPUTE REQUIRED A_s)

a) METHOD 1

$$A_s = \frac{M_n}{0.875\,d\,f_y} = \frac{(449.44)(12)}{(0.875)(25)(60)} = \underline{4.23^{in^2}}$$

b) METHOD 2

$$\left(\frac{0.85 f'_c b}{2}\right)a^2 - (0.85 f'_c bd)a + M_n = 0$$

$$\left[\frac{(0.85)(3)(16)}{2}\right]a^2 - [(0.85)(3)(16)(25)]a + (449.44)(12) = 0$$

Fall 2011

STEP 7 (CNTD)

$$20.4a^2 - 1020a + 5393.28 = 0$$

$$a = 6.01"$$

$$A_s = \frac{0.85 f'_c a b}{f_y} = \frac{(0.85)(3)(6.01)(16)}{60} = \underline{4.09\ in^2}$$

STEP 8 (SELECT BARS)

4 #9's $A_s = 4.00\ in^2$ ← TRY THIS ONE
5 #8's $A_s = 3.95\ in^2$
8 #7's $A_s = 4.8\ in^2$
10 #6's $A_s = 4.4\ in^2$

STEP 9 (CHECK ε_t)

$$c = \frac{6.01}{0.85} = 7.07"$$

$$\varepsilon_t = 0.003\left(\frac{25 - 7.07}{7.07}\right) = 0.00761 > 0.005 \checkmark \quad \underline{\text{O.K.}} \quad \phi = 0.9$$

STEP 10 (CHECK $A_{s,min}$)

$$A_{s,min} = \frac{3\sqrt{f'_c}}{f_y} b_w d = \frac{3\sqrt{3000}}{60000}(16)(25) = \underline{1.10\ in^2}$$

$$A_{s,min} = \frac{200}{f_y} b_w d = \frac{200}{60000}(16)(25) = \underline{1.33\ in^2} \leftarrow \text{CONTROLS}$$

STEP 11 (COMPUTE ACTUAL M_n & CHECK $\phi M_n \geq M_u$)

TRY 4 #9's $A_s = 4.00\ in^2$

$$d = 28 - 1.5 - 0.5 - 0.564 = 25.44"$$

$$a = \frac{A_s f_y}{0.85 f'_c b} = \frac{(4.00)(60)}{(0.85)(3)(16)} = \underline{5.88"} \qquad c = \frac{5.88}{0.85} = \underline{6.92"}$$

$$M_n = (4.00)(60)(25.44 - \tfrac{5.88}{2})(1/12) = \underline{450\ k\text{-}ft}$$

$$\varepsilon_t = 0.003\left(\frac{25.44 - 6.92}{6.92}\right) = 0.00803 > 0.005 \checkmark \quad \underline{\text{O.K.}} \quad \phi = 0.9$$

$$\phi M_n = 405\ k\text{-}ft > 404.5\ k\text{-}ft \checkmark \quad \underline{\text{OK}}$$

Fall 2011

STEP 12 (ITERATE IF NECESSARY)

NO ITERATION REQUIRED

STEP 13 (CHECK SPACING AND COVER AND SKETCH)

$X_{PROV} = 16 - 2\left(1.5 + 0.5 + \frac{4(0.5)}{2}\right) = 10"$

CLEAR SPACING = d_b OR 1" $d_b = 1.128$ ← CONTROLS

C-C SPACING = $1.128 + 1.128 = 2.256"$

$X_{REQ'D} = (3)(2.256) = \underline{6.77"} < 10"$ ✓ OK

Fall 2011

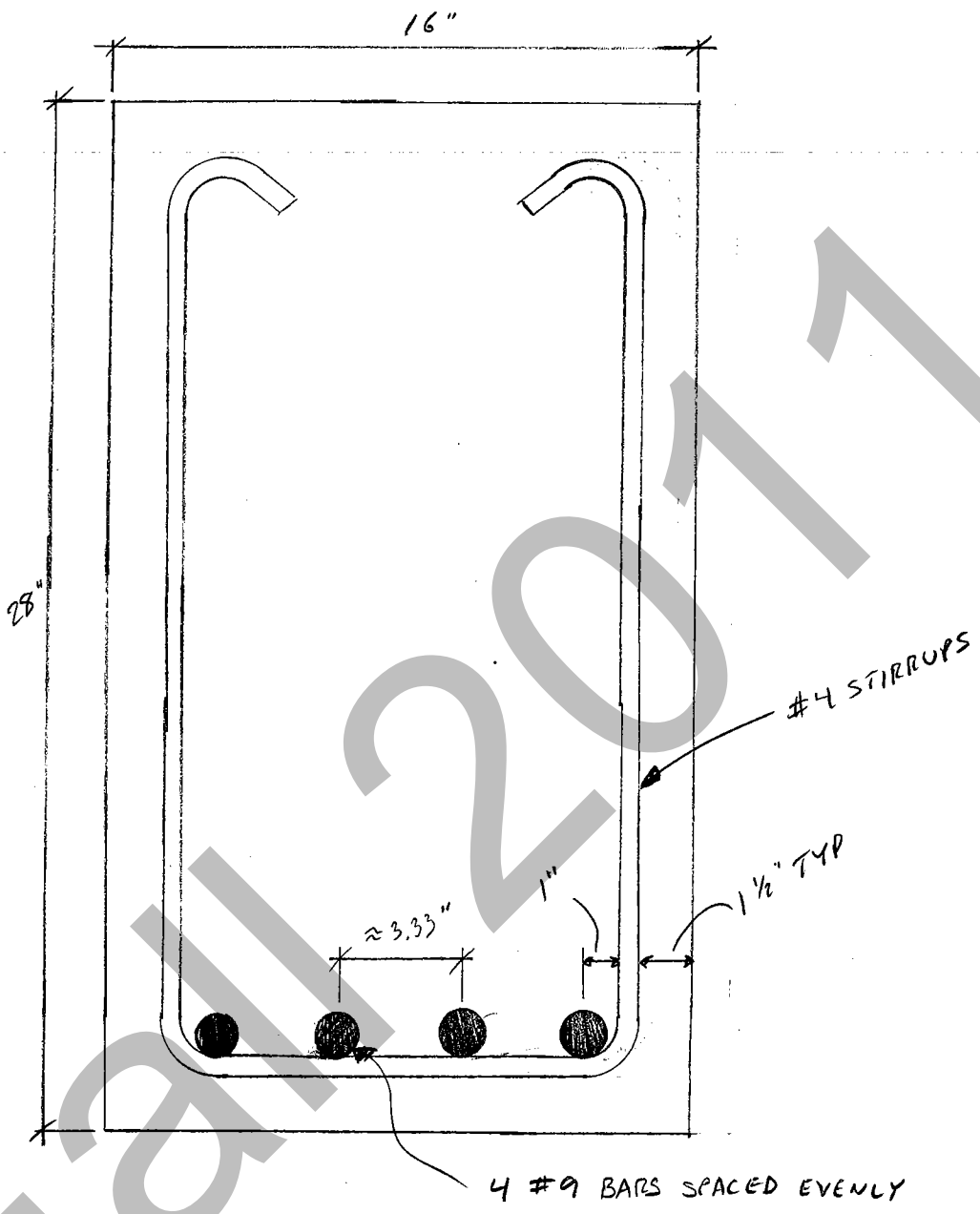

*NOTE $h = 28" > \frac{\ell}{16} = 24"$

THIS IS ADEQUATE FOR MEMBERS NOT SUPPORTING PARTITIONS OR OTHER CONSTRUCTION LIKELY TO BE DAMAGED BY LARGE DEFLECTIONS

FOR MEMBERS SUPPORTING ELEMENTS LIKELY TO BE DAMAGED BY LARGE DEFLECTIONS, h MUST BE GREATER THAN OR EQUAL TO $\ell/10$ IF SUS LOAD/TOT LOAD < 0.5
$\ell/6$ IF SUS LOAD/TOTAL LOAD > 0.5

Fall 2011