CEE 3424 – Design of Reinforced Concrete Structures I
Spring 2008
Homework #10 – Due Date: Friday, April 11, 2008

1. For the frame shown on the following page, complete each of the following:

   a. Using the Muller-Breslau method, draw the influence line on the frames provided for each of the following conditions (points 1, 2, 3, and 4 are pinned):

      i. The maximum positive moment at **Point 21**
      ii. The maximum vertical (upward) reaction at **Point 1**

   b. Using GT STRUDL and the file posed on Blackboard, apply each of the five loadings listed below and analyze the structure (apply all loadings and analyze only once):

      i. Uniform load of 1 kip/ft applied to the entire structure
      ii. Uniform load of 1 kip/ft applied to the bays that will produce the maximum positive moment at point 21 based on the influence line of part (a-i)
      iii. Uniform load of 1 kip/ft applied only to the bays on the same floor as point 21 that will produce the maximum positive moment at point 21 (treat this part as a continuous beam, use the results from a-I as in part b-ii)
      iv. Uniform load of 1 kip/ft applied to the bays that will produce the maximum vertical reaction at point 1 based on the influence line of part (a-ii)
      v. Uniform load of 1 kip/ft applied only to the three bays directly above point 1
      vi. Tabulate the results in the table shown below (specify your answers in kip-feet and kips)
      vii. Comment on the results

Comparison of Results

	Load Case (i)	Load Case (ii)	Load Case (iii)
Moment @ Point 21	30.30	41.71	39.69

	Load Case (i)	Load Case (iv)	Load Case (v)
Reaction @ Point 1	32.72	34.69	34.17

Fall 2011

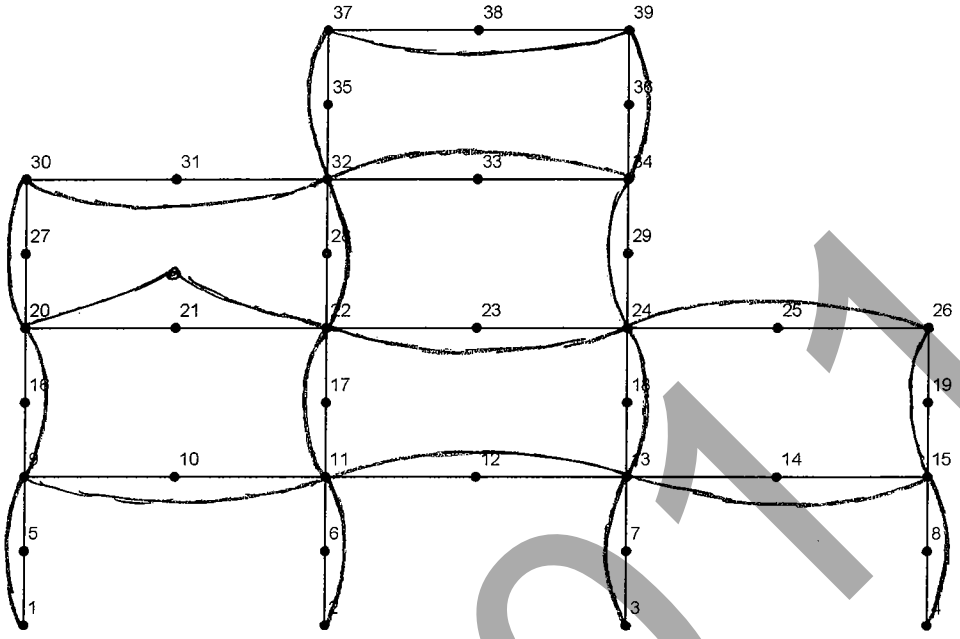

Maximum Positive Moment @ Point 21

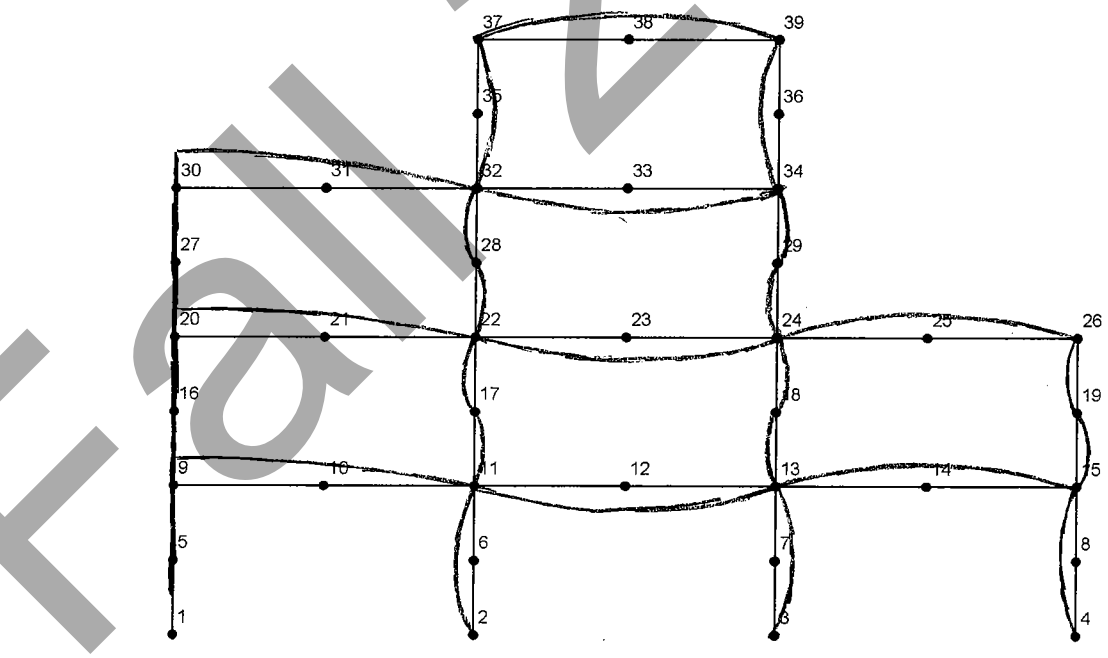

Maximum Vertical (Upward) Reaction @ Point 1

Fall 2011

1. b) vii)

The maximum moment at Point 21 is strongly influenced by the effect of the applied load at other locations in the structure. With the entire structure subject to the uniform load of 1 kip/ft, the maximum moment at Point 21 was 30.30 kip-feet. When only applying the load to the locations specified by the results from the Muller Breslau method, the maximum moment was 41.71 kip-feet, showing a 37.6% increase. This is very significant when designing the member located at Point 21. When only applying the load to the bays on the floor corresponding to Point 21, the maximum moment was 39.69, still showing a 31% increase. This loading also showed a significant increase in comparison to the first. Comparing the results from load case (ii) and load case (iii), there is only a slight difference in moments. This shows that the moment is affected by the loadings applied in the locations based on the Muller Breslau method, but are most strongly influenced by those applied to the bays of the floor corresponding to Point 21, also based on the Muller Breslau method.

The vertical reaction at Point 1 is also influenced by the effect of the applied load at other locations in the structure, but not as significantly. With the entire structure subject to the uniform load of 1 kip/ft, the maximum reaction at Point 1 was 32.27 kips. When only applying the load to the locations specified by the results the Muller Bresulau method, the maximum reaction was 34.69 kips, showing only a 7.5% increase. When only applying the load to the bays directly above the support, the maximum reaction slightly reduced from load case (iv) to 34.17. In this case, the reaction at Point 1 is influenced relatively the same amount by either load case (iv) or load case (v), but should still be taken into account in the design process.

Fall 2017

2. Design a one-way slab supported on 15 in. wide beams with an end-span of 15 ft and all other spans of 18 ft as shown below. Slab is continuous and carries its own weight PLUS a dead load of 15 psf and live load of 100 psf.

   Complete the design for sections A through E. Tabulate the results in the provided table and provide a detail drawing for reinforcement.

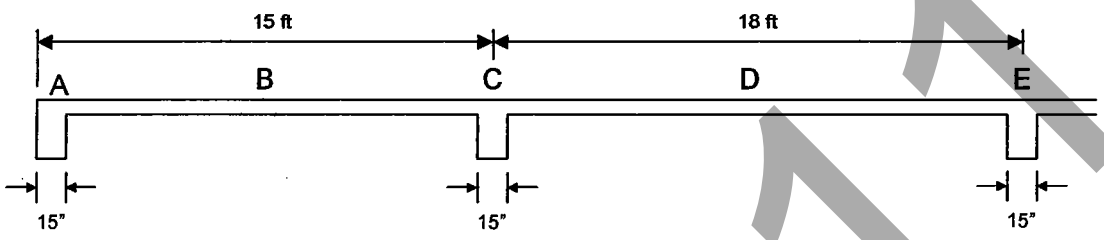

Locations	A	B	C	D	E
M_u (kip-ft)	-2.10	3.59	-6.52	5.12	-7.45
Target M_n (kip-ft)	-2.33	3.99	-7.24	5.69	-8.28
A_{sreqd} (in.^{2})	0.075	0.128	0.232	0.182	0.265
A_{smin} (in.^{2})	0.167	0.167	0.167	0.167	0.167
Select bars	#4@12"	#4@12"	#4@9"	#4@12"	#4@9
Actual A_s (in.^{2})	0.2	0.2	0.267	0.2	0.267
a (in.)	0.294	0.294	0.393	0.294	0.393
Actual M_n (kip-ft)	6.60	6.60	8.75	6.60	8.75
c (in.)	0.346	0.346	0.462	0.346	0.462
ε_t	0.056	0.056	0.041	0.056	0.041
or					
a/d_t	0.044	0.044	0.058	0.044	0.058
a_{tcl}/d_t	0.319	0.319	0.319	0.319	0.319

Fall 2011

2) SLAB DESIGN

STEP 1: (ESTIMATE SLAB DEPTH)

ONE END CONTINUOUS $= \frac{\ell}{24} = \frac{(15)(12)}{24} = 7.5"$

BOTH ENDS CONTINUOUS $= \frac{\ell}{28} = \frac{(18)(12)}{28} = 7.71"$

USE $t = \underline{7.75"}$ (INCREMENTS OF 1/4")

$d = 7.75 - (3/4 + \frac{0.5}{2}) = \underline{6.75"}$

STEP 2: (COMPUTE FACTORED LOADS AND MOMENTS)

$w_L = (100\ PSF)(1') = 100\ ^{\#}/_{'} = 0.1\ ^{\#}/_{'}$

$w_D = \left[\frac{(12)(7.75)}{144}(0.15) + \frac{(15)(1)}{1000}\right] = 0.11\ ^{k}/_{'}$

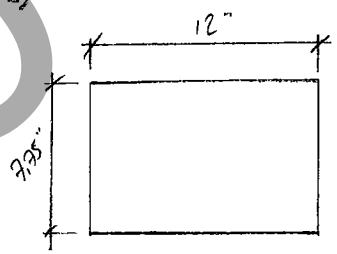

$w_u = (1.2)(0.11) + (1.6)(0.1) = \underline{0.292\ ^{k}/_{'}}$

$M_u = C_m (w_u \ell_n^2)$

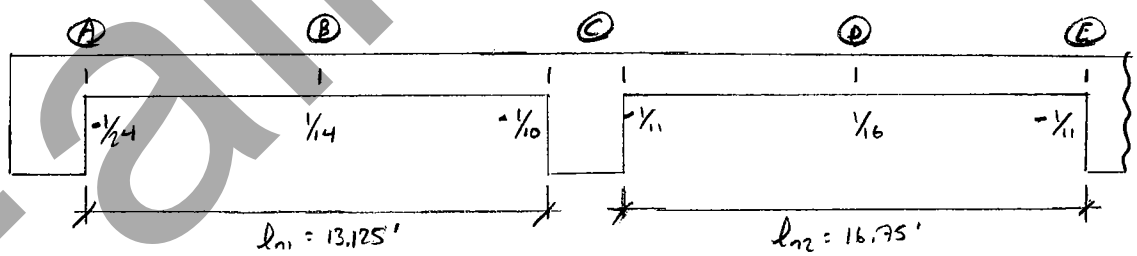

COMPUTE M_us

(A) $M_u = -\frac{1}{24}(0.292)(13.125)^2 = -2.10\ ^{k}/_{'}$

(B) $M_u = \frac{1}{14}(0.292)(13.125)^2 = 3.59\ ^{k}/_{'}$

(C) $M_u = \frac{-1}{10}(0.292)\left(\frac{13.125 + 16.75}{2}\right)^2 = -6.52\ ^{k}/_{'}$

(D) $M_u = \frac{1}{16}(0.292)(16.75)^2 = 5.12\ ^{k}/_{'}$

(E) $M_u = \frac{-1}{11}(0.292)(16.75)^2 = -7.45\ ^{k}/_{'}$

Fall 2011

2) SLAB DESIGN (CNT'D)

STEP 3: (DESIGN FLEXURAL REINFORCEMENT)

TARGET $M_n = \frac{M_u}{\phi} = \frac{2.10^{k'}}{0.9} = 2.33^{k'/1}$

$M_n = A_s f_y (0.925 d)$

$A_s = \frac{M_n}{f_y (0.925 d)} = \frac{(2.33)(12)}{(60)(0.925)(6.75)} = 0.075^{\square''/1}$

STEP 4: (MINIMUM AREA OF STEEL)

$A_{s,min} = 0.0018 bh = (0.0018)(12)(7.75) = 0.167^{\square''/1}$

STEP 5: (SELECT BARS)

#4 BAR $= 0.20^{\square''}$

#4 @ 12" $= \frac{A_s}{\text{SPACING}} \left(\frac{12''}{1'}\right) = \left(\frac{0.20}{12''}\right)\left(\frac{12}{1}\right) = 0.2^{\square''/1}$

#4 @ 9" $= \left(\frac{0.20}{9''}\right)\left(\frac{12}{1}\right) = 0.267^{\square''/1}$

STEP 6: (CHECK $\phi M_n \geq M_u$)

$a = \frac{A_s f_y}{0.85 f'_c b} = \frac{(0.2)(60)}{(0.85)(4)(12)} = 0.294''$

$d_{ACTUAL} = 7.75 - 0.75 - 0.25 = 6.75''$

$M_n = A_s f_y \left(d - \frac{a}{2}\right) = (0.2)(60)\left(6.75 - \frac{0.294}{2}\right)(1/12) = 6.60^{k'}$

STEP 7: (CHECK ε_t OR ρ/ρ_t)

$C = \frac{0.294}{0.85} = 0.346''$

$\varepsilon_t = 0.003\left(\frac{6.75 - 0.346}{0.346}\right) = 0.056 \gg 0.005$ — OK

Fall 2011